MOBILE

RICHARD CLARKSON STUDIO
assembly & care instructions

MOBILE

BY RICHARD CLARKSON STUDIO LLC

WARNING 12v ONLY! Use included Power supply! Compatable with ELV dimmer.

Unpacking your Mobile Lamp:
Carefully lay the Mobile Lamp out on the floor resting it on carpet or the packing material. Screw in each of the LED bulbs. Using the small Allen Key loosen the set screw and slide the brass globe plate up and out of the way. Place the globe over the bulb and over the globe holder, once over both lips slide the brass globe plate and set screw back down the clamp the globe in place. Tighten the set screw and repeat for remaining globes.
In some cases we will have moved the Balancing Hang Point set screw to optimize shipping, if so we have marked the estimate position of the Balancing Hang Point with tape. Slide the Balancing Hang Point set screw up to the edge of the tape indicator (it should not cover the tape). The actual set screw of the Balancing Hang Point should sit one side of the cord on the top edge (same edge as the hole). The indicator tape can then be removed.

Installing your Mobile Lamp:
Once Mobile has been assembled lift it into position and have and electrician hardwire in place at desired height or use the swag hook, when hardwiring hide the power supply inside the junction box or celling. It may be necessary to remove the Barrel Jack from the end of the cord to fit the cord through the hardwire hardware, when reconnecting it ensure the negative is connected to the cord with the black indicator. Set the hang height using the larger Allen key to tighten the setscrew on the canopy.

The lamp may be off balance to begin with and will have to be corrected.

To balance the Lamp:
This system is all about movement and equilibriums. As such the first time balancing your Mobile will take a bit of patience and a gentle hand.
Use the Allen key to loosen the set screw and move the Adjustable hang point. When shifting to point towards the cord it is often helpful to pull the cord down onto the bar prior to moving the set screw across.
Have fun with it. Perhaps after a few months you will want to re balance it so that its default horizontals are more angular.

NOTE: Richard Clarkson Studio cannot be found liable for any damages (to Mobile or other possessions) resulting from incorrect installation.

COMPONENTS:

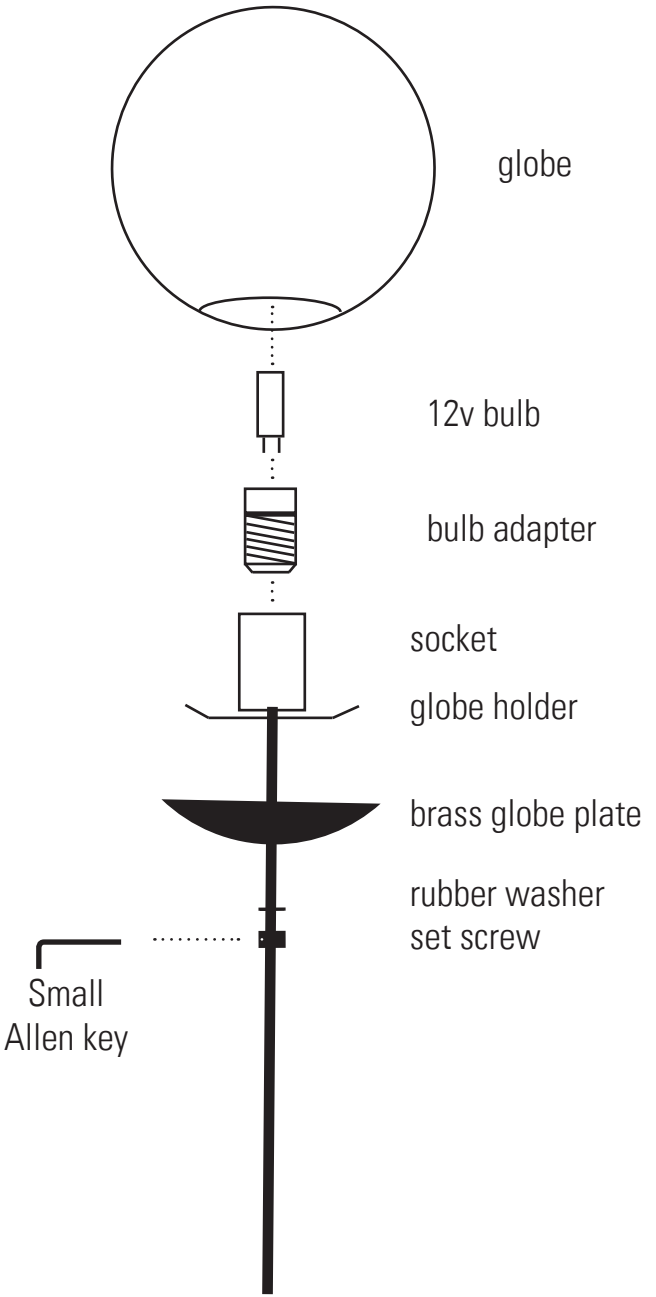
globe
12v bulb
bulb adapter
socket
globe holder
brass globe plate
rubber washer
set screw
Small
Allen key

TECH SPECS:

Input Rating for power supply: : 100-240V- 50/60Hz
Output Rating for Power supply: 12v 2amp
12v LED G4 or GY6.35 Bulb
Max cord length 10ft (3m)
Material: Brass / Steel / Glass / Acrylic
Cleaning: Gently dust polish brass parts with brass polish and soft cloth

Replacement Bulbs:
WARNING! Use only 12v LED bulbs. LED bulbs produce less heat than regular bulbs. Using any other bulb may result in risk of fire. DO NOT attempt to use a non LED bulb. If you are concerned as to which LED replacement bulb to purchase please contact Richard Clarkson Studio through the website: www.richardclarkson.com

WARNING! Do not attempt to hardwire 120v directly to the 12v side of the transformer, this will blow the bulbs and is a fire risk!

Thank you for your purchase.

Bulbs may become loose in bulb adapter during shipment or if the system is knocked. If a bulb goes out check to ensure it in still correctly inserted before ordering a replacement bulb.

BALANCING THE SYSTEM:

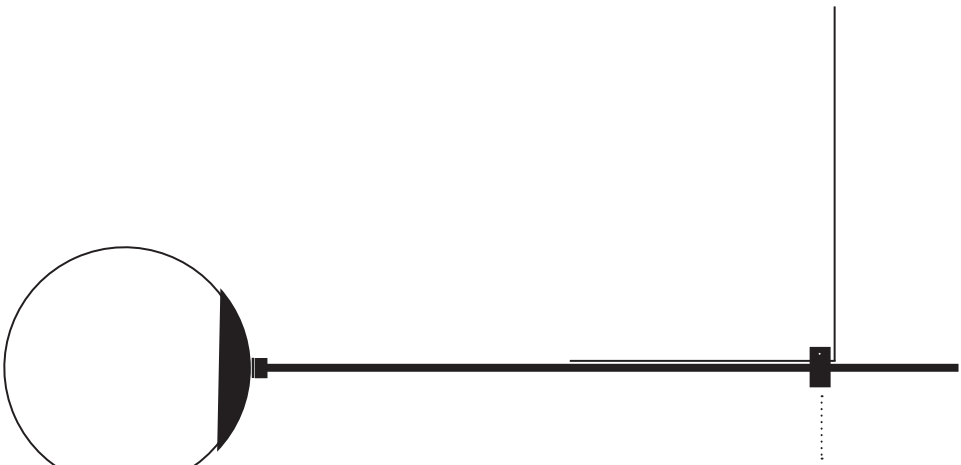

SAFETY WARNINGS:

Always use a licensed electrician.

LOAD- Ensure that the electrical junction box is rated to handle a load up to 25lbs.

READ & FOLLOW INSTRUCTIONS- All safety and operating instructions should be read before the product is operated. All operating and usage instructions should be followed. RETAIN INSTRUCTIONS-The safety and operating instructions should be retained for future reference. HEED WARNINGS - All warnings on the product and in the operating instructions should be adhered to.

CLEANING - Unplug the product from the wall outlet or other power source before cleaning. Do not use liquid cleaners or aerosol cleaners. Use a dry cloth for cleaning.

WATER AND MOISTURE - Do not use the product near water - for example, near a bath tub, wash bowl, kitchen sink, or laundry tub; in a wet basement; or near a swimming pool; and the like.

DO NOT OPEN- TO PREVENT THE RISK OF ELECTRIC SHOCK, DO NOT REMOVE PRODUCT COVERS (OR BACKS).NO USER-SERVICEABLE PARTS INSIDE. REFER SERVICING TO QUALIFIED SERVICE PERSONNEL. TO REDUCE THE RISK OF FIRE OR ELECTRIC SHOCK, DO NOT EXPOSE THIS APPARATUS TO RAIN OR MOISTURE. INDOOR USE ONLY.

OBJECT AND LIQUID ENTRY- Never push objects of any kind into the product(s) through openings as they may touch dangerous voltage points or short out parts that could result in a fire or electric shock. Never spill liquid of any kind on the product.

HEAT- The product should be situated away from any and all heat sources such as radiators, heat registers candles, stoves, and other products (including amplifiers) that produce heat. It has been treated with a Flame retardant but can still ignite under direct flame.

POWER SOURCES - The product should be operated only from the type of power source indicated on the marking label. If you are not sure of the type of power supply to your home, consult your product dealer or local power company. For products intended to operate from battery power or other sources, refer to the operating instructions.

LIGHTNING - For added protection for the product during a lightning storm, or when it is left unattended and unused for long periods of time, unplug it from the wall outlet. This will prevent damage to the product due to lightning and power line surges.

OVERLOADING - Do not overload wall outlets, extension cords, or integral convenience receptacles as this can result in a risk of fire or electric shock.

ACCESSORIES - Any mounting of the product should follow the manufacturer's instructions, and should use a mounting accessory recommended by a licensed electrician.

SERVICING - Do not attempt to service the product your self as opening or removing covers may expose you to dangerous voltage or other hazards. Refer all servicing to qualified service personnel.

LIABILITY- This product is an art piece and should be treated as such. Richard Clarkson Studio, LLC. and/or Richard Clarkson take no responsibility for damages caused by incorrectly installed units or mistreatment, including but not limited to fire damages caused by incorrect wiring or other misuse,.

- Use wiring that is appropriate for your country or region.
- To be completely disconnected from the power input, the wall switch has to be in the off position.
- Switch your product off at the wall when the device is expected to be unused for several days.

Additional guidelines for Bluetooth devices if applicable to this product.
The short wave radio frequency signals of a Bluetooth device may impair the operation of other electronic and medical devices. Switch off the device where it is prohibited. Do not use the device in medical facilities, aircraft, refueling points, close to automatic doors, automatic fire alarms or other automatically controlled devices. Keep this device at least 20 cm from pacemakers and other medical devices. Radio waves may impair the operation of pacemakers and other medical devices. The Bluetooth® word mark and logos are registered trademarks owned by Bluetooth SIG, Inc.

